Copy Milling Program Tools

Millstar face mills are equally useful on newer high velocity machines and older slower equipment and will optimize milling performance of all your machine tools. The hardened tool bodies can be run at aggressive spindle speed and feed rates, when used with Millstar's precision ground, strong and thick, round inserts with proven hard, high performance TLN and HSN tool coatings.

The tools provide for precision finish results, minimal tool deflection and run-out. Excellent milling results can be achieved in roughing, semi finishing and fine finishing in Z-level, profiling or raster cuts, as well as in linear or circular interpolation milling or ramping.

The tools may be used with coolant, but we recommend dry, mist or MQL (minimum quantity lubrication) milling with strong air blast when high speed or hard machining steel, particularly in the higher hardness range (> 45HRc / 425 HBN).

Copy Milling Program Tool Contents

FM Style 1	Toroid Cylindrical End Milling Cutter	26	
FM Style 2	Toroid Taper End Milling Cutter	26	
FMA	Arbor Style Milling Cutter	26	
Insert Data		27	
Cutting Conditions		27	
APKT Series		28	
Arbor Style Holders		29	
Screw On Heads		29	

Milling Cutters Identification System

Arbor

Measurement System	Denotes Copy Milling Arbor Style	Denotes Diameter Size		Denotes Number of Flutes
Imperial	**FMA**	**2000**	/	**5**
Metric	**FMA**	**63**	/	**5**

Shank

Measurement System	Denotes Copy Milling Cutter	Denotes Diameter Size		Denotes Number of Flutes		Denotes Tool Cutter Length		Denotes Tool Diameter Shank
Imperial	**FM**	**1000**	/	**2**	-	**6.0**	-	**1000**
Metric	**FM**	**25**	/	**2**	-	**180**	-	**25**

Copy Milling Program Tools

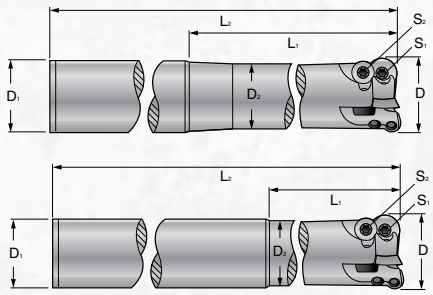

Toroid Taper End Milling Cutters
Toroid Cylindrical End Milling Cutters

Tool Ordering Number	Dimensions						Insert Screw	Face Clamp Screw	Key	Insert Code
	ØD	ØD1	ØD2	L1	L2	Z				
FM-1000/2-6.0-1000	1.000	1.000	0.882	1.250	6.000	2	FMIS-1	FMIS-2	T15	FMI-12T3 FMIR-12T3
FM-1250/3-6.0-1000	1.250	1.000	0.882	1.500	6.000	3	FMIS-1	FMIS-2	T15	FMI-12T3 FMIR-12T3
FM-1500/4-6.0-1250	1.500	1.250	1.125	1.500	6.000	4	FMIS-1	FMIS-2	T15	FMI-12T3 FMIR-12T3
FM-1500/4-9.0-1250	1.500	1.250	1.125	1.500	6.000	4	FMIS-1	FMIS-2	T15	FMI-12T3 FMIR-12T3

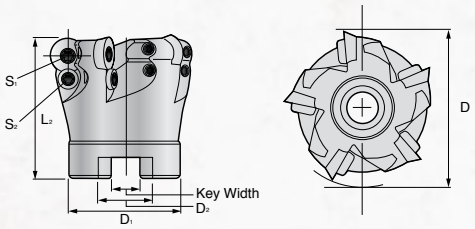

Arbor Style Milling Cutters

Tool Ordering Number	Dimensions						Arbor Screw	Insert Screw S1	Face Clamp Screw S2	Key	Insert Code
	ØD	ØD1	L2	Z	Key Width	D2					
FMA-2000/5	2.000	1.570	2.000	5	0.312	0.750	0.375	FMIS-1	FMIS-2	T15	FMI-12T3 FMIR-12T3
FMA-2500/5	2.500	1.570	2.000	5	0.375	1.000	0.500	FMIS-1	FMIS-2	T15	FMI-12T3 FMIR-12T3
FMA-3000/5	3.000	1.570	2.000	5	0.375	1.000	0.500	FMIS-1	FMIS-2	T15	FMI-12T3 FMIR-12T3
FMA-4000/7-16	4.000	2.880	2.500	7	0.500	1.250	0.625	FMIS-6	FMIS-6 FMIW-6	T20	FMI-1604
FMA-6000/9-16	6.000	3.820	2.500	9	0.625	1.500	-	FMIS-6	FMIS-6 FMIW-6	T20	FMI-1604

Copy Milling Program Tools

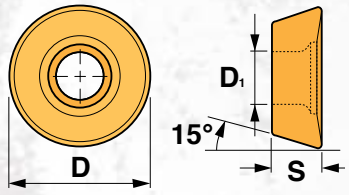

Insert Data

Tool Ordering Number	Dimensions			HSN	TLN
	D	S	D1		
FMI-0702	0.275/7mm	0.094	0.112	•	•
FMI-1003	0.393/10mm	0.125	0.153	•	•
FMI-12T3	0.472/12mm	0.156	0.154	•	•
FMIR-12T3	0.472/12mm	0.156	0.154	•	•
FMI-1604	0.629/16mm	0.205	0.1875	•	•

Cutting Conditions: Recommended Cutting Speed And Ap

Working Material	Hardness	Insert Type	Grade	SFM	Ap Max Roughing	Ap Max Medium	Ap Max Light
Low Alloy Steel (1.7225)	200-280HB	FMI	HSN, TLN	300-800	.08-.16	.04-.08	.004-.04
Alloy & Die Steel (1.2311, P20, DME2/3/5)	32-42HRC	FMI	HSN, TLN	300-600	.08-.16	.04-.08	.004-.04
Tool Steel (1.2344, 1.2379)	42-52HRC	FMI	HSN, TLN	200-450	.08-.12	.04-.08	.004-.04
Stainless Steel (1.4301, 1.4401)	200-350HB	FMIR	HSN, TLN	300-600	.08-.16	.04-.08	.004-.04
Gray Cast Iron (GG25-GG30)	160-260HB	FMIR	HSN, TLN	300-600	.08-.16	.04-.08	.004-.04
Nodular Cast Iron (GGG60-GGG70)	180-300HB	FMIR	HSN, TLN	300-1200	.08-.16	.04-.08	.004-.04
Copper Alloy	80-150HB	FMIR	TLN	1200	.08-.16	.04-.08	.004-.04
Aluminum Alloys	30-120HB	FMIR	TLN	3000	.08-.16	.04-.08	.004-.04
Ni & Co Based Alloy	250-320HB	FMIR	HSN, TLN	100-450	.08-.12	.04-.08	.004-.04
Titanium Alloy (Annealed)	<350HB	FMIR	HSN, TLN	100-450	.08-.12	.04-.08	.004-.04

Cutting Conditions: Recommended Feed fz (in./tooth)

Operation	Ap										
	IC	0.012	0.02	0.028	0.031	0.04	0.05	0.08	0.12	0.16	0.2
Light	10	0.012	0.008	0.008	0.007	0.006	0	0	0	0	0
	12	0.015	0.012	0.010	0.012	0.008	0.006	0	0	0	0
	16	0.016	0.015	0.012	0.012	0.009	0.008	0.007	0	0	0
Rough	10	0	0	0	0	0.012	0.009	0.008	0.007	0.006	0.005
	12	0	0	0	0	0.016	0.014	0.012	0.011	0.009	0.008
	16	0	0	0	0	0.020	0.017	0.015	0.012	0.011	0.010

The "fz" indicated above is for an overhang of 3xD. The values are calculated based on the recommended thickness of the chip "hm".

LIGHT: Ae up to 25% of the Diameter of the Tool "D".

ROUGH: Ae up to 75% of the Diameter of the Tool "D".

Working Diameter (D_w)

In order to compute the RPM value of the spindle it is necessary to determine the Dw which is the effective engaged tool diameter. The Dw depends on the geometry of the inserts (ball nose or toroid) and of the relative position of the tool against the working piece surface. A formula is presented.

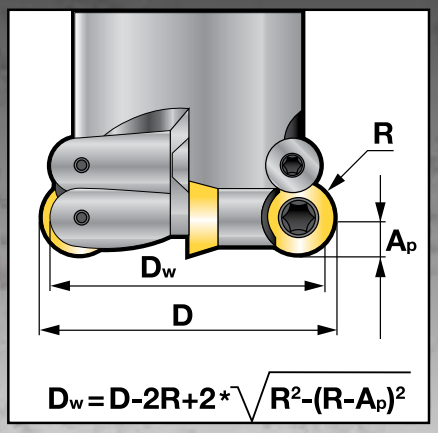

Copy Milling Program Tools

Millstar face mills are equally useful on newer high velocity machines and older slower equipment and will optimize milling performance of all your machine tools. The hardened tool bodies can be run at aggressive spindle speed and feed rates, when used with Millstar's precision ground, strong and thick, round inserts with proven hard, high performance TLN and HSN tool coatings.

The tools provide for precision finish results, minimal tool deflection and run-out. Excellent milling results can be achieved in roughing, semi finishing and fine finishing in Z-level, profiling or raster cuts, as well as in linear or circular interpolation milling or ramping.

The tools may be used with coolant, but we recommend dry, mist or MQL (minimum quantity lubrication) milling with strong air blast when high speed or hard machining steel, particularly in the higher hardness range (> 45HRc / 425 HBN).

Copy Milling Program Tool Contents

FM Style 1	Toroid Cylindrical End Milling Cutter	80	
FM Style 2	Toroid Taper End Milling Cutter	80	
FMA	Arbor Style Milling Cutter	80	
Insert Data		81	
Cutting Parameters		81	
APKT Series		82	
Arbor Style Holders		83	
Screw On Heads		83	

Milling Cutters Identification System

Arbor

Measurement System	Denotes Copy Milling Arbor Style	Denotes Diameter Size		Denotes Number of Flutes
Imperial	FMA	2000	/	5
Metric	FMA	63	/	5

Shank

Measurement System	Denotes Copy Milling Cutter	Denotes Diameter Size		Denotes Number of Flutes		Denotes Tool Cutter Length		Denotes Tool Diameter Shank
Imperial	FM	1000	/	2	-	6.0	-	1000
Metric	FM	25	/	2	-	180	-	25

Copy Milling Program Tools

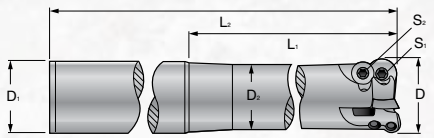

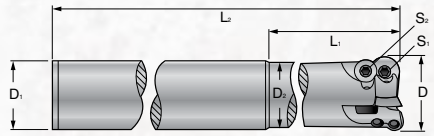

Toroid Taper End Milling Cutters
Toroid Cylindrical End Milling Cutters

Tool Ordering Number	Dimensions						Insert Screw	Face Clamp Screw	Key	Insert Code
	ØD	ØD1	ØD2	L1	L2	Z				
FM-25/2-180-25	25	25	23	30	180	2	FMIS-1	FMIS-2	T15	FMI-12T3
FM-32/2-180-32-16	32	32	29	100	180	2	FMIS-6	FMIS-6 FMIW-6	T20	FMI-1604
FM-32/3-180-25	32	25	24	42	180	3	FMIS-1	FMIS-2	T15	FMI-12T3 FMIR-12T3
FM-32/3-180-32	32	32	29	70	180	3	FMIS-1	FMIS-2	T15	FMI-12T3 FMIR-12T3
FM-32/4-180-32-10	32	32	31	42	180	4	FMIS-1	NA	T15	FMI-1003
FM-40/3-180-32-16	40	32	29	NA	180	3	FMIS-6	FMIS-6 FMIW-6	T20	FMI-1604
FM-40/4-180-32	40	32	31	42	180	4	FMIS-1	FMIS-2	T15	FMI-12T3 FMIR-12T3
FM-42/4-180-32	42	32	31	42	180	4	FMIS-1	FMIS-2	T15	FMI-12T3 FMIR-12T3

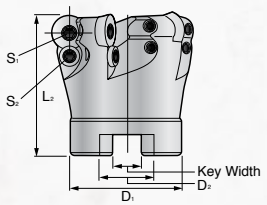

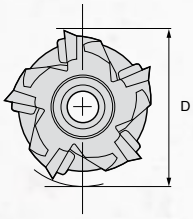

Arbor Style Milling Cutters

Tool Ordering Number	Dimensions						Arbor Screw	Insert Screw S1	Face Clamp Screw S2	Key	Insert Code
	ØD	ØD1	L2	Z	Key Width	D2					
FMA-50/5	50	40	50	5	10,4	22	10mm	FMIS-1	FMIS-2	T15	FMI-12T3 FMIR-12T3
FMA-52/7-10	52	40	50	7	10,4	22	10mm	FMIS-1	NA	T15	FMI-1003
FMA-52/5	52	40	50	5	10,4	22	10mm	FMIS-1	FMIS-2	T15	FMI-12T3 FMIR-12T3
FMA-52/4-16	52	40	50	4	10,4	22	10mm	FMIS-6	FMIS-6 FMIW-6	T20	FMI-1604
FMA-63/5	63	42	50	5	10,4	22	12mm	FMIS-1	FMIS-2	T15	FMI-12T3 FMIR-12T3
FMA-63/5-16	63	48	50	5	12,4	27	12mm	FMIS-6	FMIS-6 FMIW-6	T20	FMI-1604
FMA-63/5-16-22	63	40	50	5	10,4	22	12mm	FMIS-6	FMIS-2	T15	FMI-1604
FMA-100/7-16	100	84	55	7	14,4	32	32mm	FMIS-6	FMIS-6 FMIW-6	T20	FMI-1604

Copy Milling Program Tools

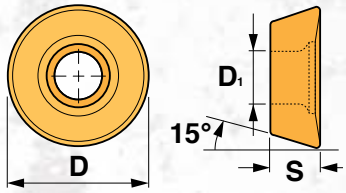

Insert Data

Tool Ordering Number	Dimensions			HSN	TLN
	D	S	D1		
FMI-0702	7	2,38	2,84	•	•
FMI-1003	10	3,18	3,88	•	•
FMI-12T3	12	3,97	3,9	•	•
FMIR-12T3	12	3,97	3,9	•	•
FMI-1604	16	4,77	5,2	•	•

Cutting Conditions: Recommended Cutting Speed And Ap

Working Material	Hardness	Insert Type	Grade	Vc m/min	Ap Max Roughing	Ap Max Medium	Ap Max Light
Low Alloy Steel (1.7225)	200-280HB	FMI	HSN, TLN	130-200	2,5-4,5	1,0-2,5	0,1-1,0
Alloy & Die Steel (1.2311, P20, DME2/3/5)	32-42HRC	FMI	HSN, TLN	100-150	2,5-4,0	1,0-2,5	0,1-1,0
Tool Steel (1.2344, 1.2379)	42-52HRC	FMI	HSN, TLN	80-100	2,0-3,5	1,0-2,5	0,1-1,0
Stainless Steel (1.4301, 1.4401)	200-350HB	FMIR	HSN, TLN	120-170	2,5-4,0	1,0-2,5	0,1-1,0
Gray Cast Iron (GG25-GG30)	160-260HB	FMIR	HSN, TLN	140-190	2,5-4,0	1,0-2,5	0,1-1,0
Nodular Cast Iron (GGG60-GGG70)	180-300HB	FMIR	HSN, TLN	120-170	2,5-4,0	1,0-2,5	0,1-1,0
Copper Alloy	80-150HB	FMIR	TLN	350	2,5-4,5	1,0-2,5	0,1-1,0
Aluminum Alloys	30-120HB	FMIR	TLN	400	2,5-5,0	1,0-2,5	0,1-1,0
Ni & Co Based Alloy	250-320HB	FMIR	HSN, TLN	30-60	2,0-3,0	1,0-2,5	0,1-1,0
Titanium Alloy (Annealed)	<350HB	FMIR	HSN, TLN	50-70	2,0-3,0	1,0-2,5	0,1-1,0

Cutting Conditions: Recommended Feed fz (mm/tooth)

Operation	Ap												
	IC	0,3	0,5	0,7	0,8	1	1,2	2	3	4	5	6	8
Light	10	0,3	0,23	0,2	0,18	0,15	0	0	0	0	0	0	0
	12	0,38	0,3	0,25	0,23	0,21	0,18	0	0	0	0	0	0
	16	0,45	0,35	0,3	0,27	0,23	0,21	0,18	0	0	0	0	0
Rough	10	0	0	0	0	0,32	0,29	0,22	0,18	0,16	0,14	0	0
	12	0	0	0	0	0,42	0,38	0,3	0,28	0,24	0,20	0,18	0,16
	16	0	0	0	0	0,50	0,47	0,36	0,3	0,27	0,25	0,34	0,23

The "fz" indicated above is for an overhang of 3xD. The values are calculated based on the recommended thickness of the chip "hm".

LIGHT: Ae up to 25% of the Diameter of the Tool "D".

ROUGH: Ae up to 75% of the Diameter of the Tool "D".

Working Diameter (D_w)

In order to compute the RPM value of the spindle it is necessary to determine the Dw which is the effective engaged tool diameter. The Dw depends on the geometry of the inserts (ball nose or toroid) and of the relative position of the tool against the working piece surface. A formula is presented.

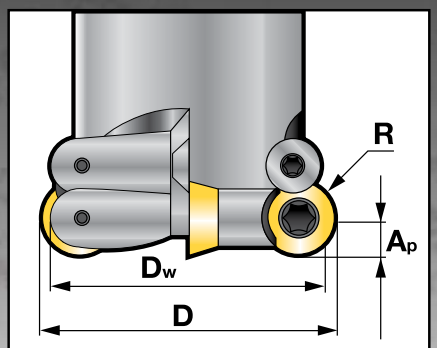

$$D_w = D - 2R + 2 * \sqrt{R^2 - (R - A_p)^2}$$